Hydraulic Tie Drill

910157

Operating Manual

1955 Norwood Court
Mount Pleasant, WI 53403
Phone: (262) 637-9681
Email: custserv@racinerailroad.com
racinerailroad.com

Unit 3 Hartington Industrial Estate
Chesterfield • Derbyshire, S43 3YF
Phone: 0330 164 1375
Email: info@racinerailroad.co.uk
racinerailroad.co.uk

Hydraulic Tie Drill

910157

Record of Changes

Rev No.	Date	Description of Changes
Rev 1	3.2015	Initial release.
Rev 2	1.2019	Added assembly drawings and parts list
Rev 2.1	9.2022	Add RRP# 476755 Lower Guard to parts list
Rev 2.2	1.2023	Update manual format and layout
Rev 2.3	3.2023	Update Footer and Contact Information Update Parts and Service page with contact information
Rev 2.4	10.2023	Update Technical Support & Service information

1955 Norwood Court
Mount Pleasant, WI 53403
Phone: (262) 637-9681
Email: custserv@racinerailroad.com
racinerailroad.com

Unit 3 Hartington Industrial Estate
Chesterfield • Derbyshire, S43 3YF
Phone: 0330 164 1375
Email: info@racinerailroad.co.uk
racinerailroad.co.uk

Table of Contents

This page was intentionally left blank.

Section 1: Overview and Safety

Hydraulic Tie Drill Overview

Racine Railroad Products designs and manufactures equipment primarily for the repair and new construction of rail and railroad tie track maintenance.

The RRP Hydraulic Tie Drill is a quality product with unique features that make this the perfect solution for your entire rail drilling requirements. The Hydraulic Tie Drill Features a telescopic drill bit guard with a built-in depth stop, which leads to drilling holes quickly and efficiently.

Do not use this machine for other than its intended purpose.

Please read these instructions when using this tool, which can only be used for the specified purpose. This instruction manual should be kept throughout the life of the tool.

The operator of this tool should:

- Have access to this operation instruction.
- Read and understand this operation instruction.

Environmental Protection

Comply with relevant national waste disposal laws and regulations. Waste electronic devices cannot be treated as household waste.

Equipment, accessories, and packaging shall be recyclable.

Do not throw the discarded equipment in trash cans.

Safety Information

For safe installation and operation of this equipment, carefully read and understand the contents of this manual. Improper operation, handling, or maintenance can result in equipment damage and personal injury.

Only trained and authorized personnel should be allowed to operate this machine. In addition, all personnel at the worksite should be aware of the safety concerns and their individual responsibilities prior to working with this machine.

Please read and comply with all the safety precautions in this manual ***before*** operating this machine. Your safety is at risk.

Safety Terms

DANGER **DANGER indicates a hazardous operating procedure, practice, or condition. If the hazardous situation is not avoided death or serious injury will occur.**

WARNING **WARNING indicates a hazardous operating procedure, practice, or condition. If the hazardous situation is not avoided death or serious injury could occur.**

CAUTION **CAUTION indicates a potentially hazardous operating procedure, practice, or condition. If the hazardous situation is not avoided moderate or minor injury could occur.**

Machine Use and Safety Precautions

WARNING **Failure to follow safety precautions when operating this equipment can result in serious injury or death to the operator or other persons in the area.**

Observe the following precautions whenever you are operating, working on or near this equipment.

Do not make any modifications without authorization or written approval from Racine Railroad Products. Replace all Racine Railroad Products and OEM parts with genuine Racine Railroad Products and OEM parts. Using non-OEM parts may compromise the safety of the machine.

Do not wear loose clothing, jewelry, radio belts, etc., when operating, working on or near this equipment. They can be caught in moving parts and may result in severe injury.

Always wear appropriate personal protective clothing when operating this equipment: e.g., orange safety vest, hard hat, safety glasses with side shields, hearing protection, steel-toed safety boots, leather gloves, dust respirator, etc.

Always lift heavy objects with the knees and legs, not the arms and back.

Always keep hands, arms, feet, head, clothing, etc., out of the operating area and away from all rotating or moving components when operating, working on or near this machine.

Always make sure that all guards, covers, belts, hoses, and operating components are in good working order and that all controls are in the appropriate position before starting the engine.

Always make sure that all safety equipment installed properly and are in good working order. Do not operate the machine until unsafe conditions have been corrected.

Always operate in a well-ventilated area and make sure that the air filters, air filter covers, and muffler are in good condition.

Always keep the machine clean and free of debris. Operate the machine in a safe and responsible manner. Exercise caution when fueling, working on or near rotating or moving components, hot components, and fuel systems. Be aware of potential fire hazards and prevent sparks, exhaust, etc., from starting fires on the machine and/or work area.

Always comply with all instructions provided on any decals or placards installed on the machine and with any relevant amplifying information provided in this manual or other general operating procedures.

Always disconnect the power source and make sure that all controls are in a safe position and install all appropriate locking and safety devices before doing any of the following:

- Lubricating
- Adjusting
- Installing Tooling
- Making Repairs
- Performing Service

Section 2: Specifications and Installation

Specifications

Circuit	10 GPM @ 2000 psi / 38 LPM @ 138 bar
Length	32 in. [81.2 cm]
Width	19 in. [48.2 cm]
Height	4 in. [10.1 cm]
Weight	33 lbs [14.9 kg]
Drilling range	1 to 1 1/2" [25 - 38 mm] - hole diameter

Physical

Circuit ..... 10 GPM @ 2000 psi / 38 LPM @ 138 bar

Length ..... 32 in. / 81.2 cm

Width ..... 19 in. / 48.2 cm

Height ..... 4.5 in. / 11.4 cm

Weight (Dry ..... 33 lbs / 14.9 kg

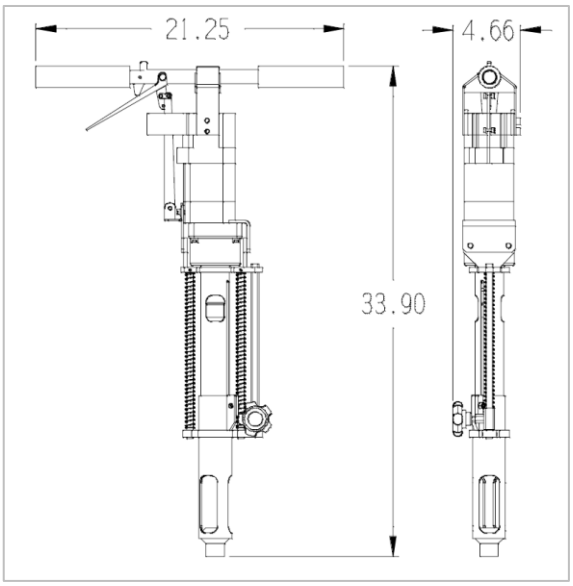

Hydraulic Fluid Requirements [Viscosity (Fluid Thickness)]

USA	Metric
50 °F 450 SSU Max	1 °C 95 Centistokes
100 °F 130-200 SSU	38 °C 27-42 C.S.
140 °F 85 SSU Min.	60 °C 16.5 C.S., Min.

Pour Point ..... 10 °F / 23 °C Minimum (for cold startup)

Viscosity Index (ASTM D 2220)..... 140° F Minimum

Demulsibility (ASTM D-1401) ..... 30 Minutes Maximum

Flash Point (ASTM D-92) ..... 340 °F / 171 °C Minimum

Rust Inhibition (ASTM D-665 A & B) ... Pass

Oxidation (ASTM D943) ..... 1000 Hours Minimum

Pump Wear Test (ASTM D2882)..... 60 mg Maximum

Tie Drill Components

The Tie Drill is operated from a T style handle.

- On the T style handle is a trigger that is used to operate the driver (Arrow A).
- A trigger lock prevents accidental operation of the tool (Arrow B).
- Hose whips move the hydraulic couplers away for operator's hands making the tool easy to handle (Arrow C).
- The manifold features a push button to reverse the direction of rotation (Arrow D).

  The drill has a 7/16 hex quick chuck for mounting a verity of drill bits.
- A grease zerk allows lubrication of the internal impact components without disassembling the tool (Arrow E).
- The Drill Bit Guard prevents pants or loose-fitting clothing from being caught in the bit (Arrow F).

  The guard also incorporates a depth gauge and stop to limit hole depth (Arrow G).

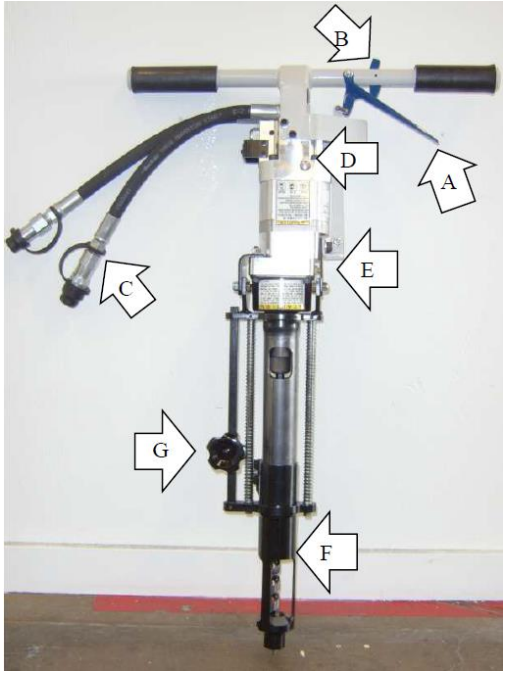

Tie Drill Depth Gauge

The Tie Drill Depth Gauge mounts to the tool with two bolts.

The Depth Gauge allows the operator to limit the drilling depth by loosening a knob and adjusting the length of the stop.

Installation

Unpacking Instructions

Upon receiving your Tie Drill promptly remove it from the shipping container. Always keep the top side of container up. Inspect unit for damage which may have incurred during shipping and report it to carrier for claim.

Tool Preparations

The Tie Drill requires is ready for use after unpacking and no special preparation is required. If the tool is used in cold weather, preheat the hydraulic fluid by running the power source at low engine speed.

Fluid temperature should be at or above 50 °F/10 °C (400-ssu / 82 centistoke) before use, when using recommended fluids. Using too thick fluid may result in tool damage.

WARNING

Never stick foreign objects, fingers, or other extremities into the moving mechanism. Failure to follow these instructions may lead to severe personal injury or tool damage.

When operating the Tie Drill, do no change rotation with the drill bit rotation. Allow the drill bit to completely stop rotating before pushing the button.

Before Operating

Before operating the Tie Drill, it is important to inspect the trigger linkage mechanism for obstructions.

Follow all safety precautions when inspecting tool.

- Make sure all kits and components are securely mounted and tight.
- Remove the drill bit from the drill chuck if one is installed.
- Hold the drill by the handles so the working end is suspended off the ground.
- When the trigger is drawn the handle, the drill chuck should rotate.
- Release the trigger and allow the tool to stop rotating.
- Press the button to reverse the rotation and check that the tool rotates in both directions.

Hose Requirements

It is not often necessary or advisable to use long hoses. All hoses must have an oil resistant inner surface and an abrasion resistant outer surface. Each hose must have male pipe ends for most application.

Longer hoses can be used when necessary but can affect the operation of the tool due to resistance in the hose.

If small diameter or long hoses are used, or if restrictive fittings are connected to the supply and return ports, the pressure required to push the fluid through the system and back to the tank will be higher. This will reduce tool power.

Important: Oil should always flow from the male coupler through the female coupler.

Note: The pressure increases in uncoupled hoses left in the sun. This may make them difficult for them to connect. When possible after use, connect the free ends of the operating hoses together.

Hose Types

Hydraulic hose types authorized for use with the Tie Drill are:

1. Labeled and certified nonconductive.
   - This is the only hose authorized for use near electrical conductors.
2. Wire braided (conductive)
   - This hose is conductive and must never be used near electrical conductors.
3. Fabric braided (not certified or labeled non-conductive)
   - This hose is conductive and must never be used near electrical conductors.

The rated working pressure of the hydraulic hose must be at least 2500 psi (175 bar).

Hydraulic Hose Recommendation

Hydraulic Hose Recommendation								
Flow Per Circuit		Length Each Hose		Use	Inside Diameter		SAE Spec Hose (Wire Braid)	SAE Spec Hose (Fiber Braid)
GPM	LPM	Feet	Meter		Inch	MM		
5 to 8	19 to 30	To 50	To 15	Both	1/2	13	SAE 100R1-8	100R7-8
5 to 8	19 to 30	51 to 100	15 to 30	Both	5/8	16	SAE 100R2-10	SAE 100R8-10
5 to 8	19 to 30	100 to 300	30 to 90	Pressure Return	5/8 3/4	16 19	SAE 100R2-10 SAE 100R1-12	SAE 100R8-10 SAE 100R7-12
9 to 12	34 to 45	To 50	To 15	Both	5/8	16	SAE 100R2-10	SAE 100R8-10
9 v 12	34 to 45	51 to 100	15 to 30	Pressure Return	5/8 3/4	16 19	SAE 100R2-10 SAE 100R3-12	SAE 100R8-10 SAE 100R7-12
9 to 12	24 to 45	100 to 200	30 to 60	Pressure Return	3/4 1	19 25.4	SAE 100R2-12 SAE 100R1-16	SAE 100R8-12 SAE100R7-16

The rated working pressure of the hydraulic hose must be at least 2500 psi / 173 bar.

Hydraulic Fluid Recommendation

Inspect hoses for cuts, crushing, leaks, or abrasion, which may be a safety hazard or reduce fluid flows.

The following fluids work well over a wide temperature range at startup, allow moisture to settle out, and resist biological growth likely in cool operating hydraulic circuits.

Others that meet or exceeds the specifications of these fluids may also be used.

Type	Hydraulic fluid
Amsoil	AWH ISO 32
Chevron	Rando HD Premium Oil MV ISO VG 32 Rando HDZ ISO 32
Gulf	Harmony AW ISO Multi-Grade 32
Mobil	DTE Oil Excel 32
Schaeffer	Dilex Supreme Hydraulic Fluid w/ Dynavis ISO 46.
Shell	Shell Tellus S2 VX 32
Sunoco	Sunvis 1032 HVI Hydraulic Oil

Tool Connecting Procedures

1. Stop the engine before connecting the tool and or hoses to the power unit, and when switching hoses or tools.
2. Turn the hydraulic on/off valve to the off position before starting the engine.

   Make sure all hoses are connected for correct flow direction to and from the tool being used.

   When routing hose in the work area, position them where personnel will not be at risk of tripping over them where vehicles can run over the hoses. Do not lay hose over sharp objects.

WARNING **Pressurized fluid escaping from a damaged hose can penetrate the skin and be injected in the body causing injury or death.**

Do not pull on hoses to drag the power unit or tool.

Connecting Hoses

1. Wipe quick couplers with a clean lint free cloth before connecting them.
2. Depressurize the system.
3. Allow system and hydraulic fluid to cool if too hot to handle.
4. Securely connect the return (tank “R”) hose from the power source to the tool.
5. Securely connect the supply (pressure “P”) hose from the power source to the tool.

   It is recommended that you connect the return hoses first and disconnect last to minimize or avoid trapping pressure within the tool.

   When connecting the quick couplers, the flow should run from male coupler to the female coupler. The female coupler on the tool is the inlet. Quick couplers are marked with a flow direction arrow.

WARNING **Pressurized fluid escaping from a damaged hose can penetrate the skin and be injected in the body causing injury or death.**

Do not pull on hoses to drag the power unit or tool.

Note: When possible, connect the free ends of uncoupled hoses to prevent build up in the hoses. The sun can also increase pressure in the hoses and make connecting them difficult.

Disconnecting Hoses

1. Stop the hydraulic power source.
2. Depressurize the system.
3. Allow system and hydraulic fluid to cool.
4. Disconnect the supply (pressure) hose to the power source (pressure port) from the tool (IN port).
5. Disconnect the return (tank) hose to the hydraulic power source (return port) from the tool (OUT port).
6. To prevent contamination, always install dust caps over the hydraulic ports of the tool when disconnected.

Section 3: Tool Operation

Personal Protective Equipment

Before operating this machine, make sure that all general safety precautions are observed, and that proper personal protective clothing is worn as described below.

At a minimum, operators should wear the following Personal Protective Equipment:

1. Safety Glasses
2. Hearing Protection
3. Hard Hat
4. High Visibility Safety Vest
5. Leather Work Gloves
6. Steel Toed Safety Shoes

Drill Bit Installation

1. To install a drill bit, insert the bit into the opening at the end of the guard.
2. Insert the hex end slightly into the chuck.
3. Pull the retaining ring of the chuck (Arrow B) away from the impact head and fully insert the bit.
4. Release the retaining ring and check that the bit is secure in the chuck before using the tool.

   Racine Railroad Products recommends the RRP Diesel Power Unit that meets the needs for most hydraulic tools used by the railroad industry.

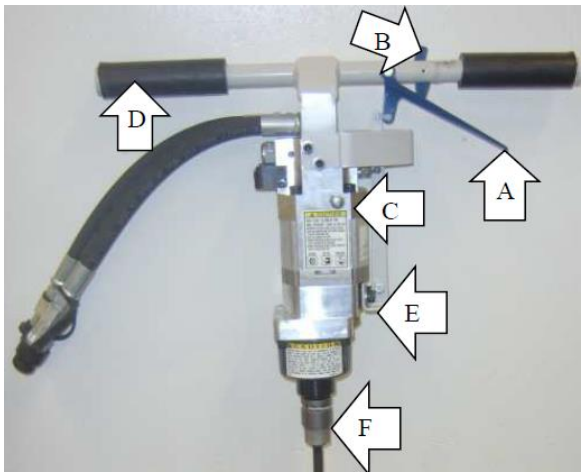

Accessories

The Tie Drill comes with the Drill Bit Guard attached.

This protects the operator from having pants or loose fitting clothing tangled or wrapped in the drill bit. T

his guard must be attached during operation and should be removed only if the drilling location interferes with its function. If the guard is removed, it must be replaced immediately when returning to standard drilling operation.

⚠CAUTION

Use the Depth Gauge Kit when using a drill guide or in a location where the Drill Bit Guard (standard equipment) will not fit. Use extreme caution to prevent pants or loose fitting clothing from being wrapped in drill bit! Severe injury could occur!

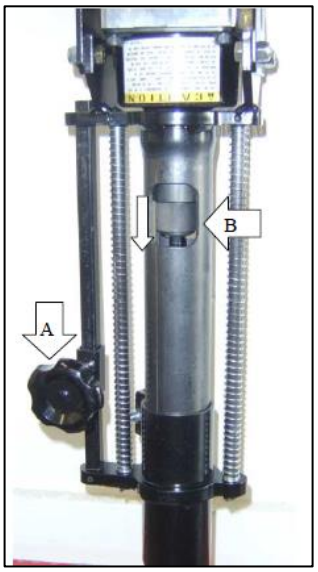

Drill Bit Guard

If the Drill Bit Guard is removed, then the chuck guard must be installed to protect the operator from a retaining pin failure.

Items 55, 58, 59, and 1 must be installed before using the tool.

For more detail, see *Tie Drill Assembly* section for part numbers and assembly order.

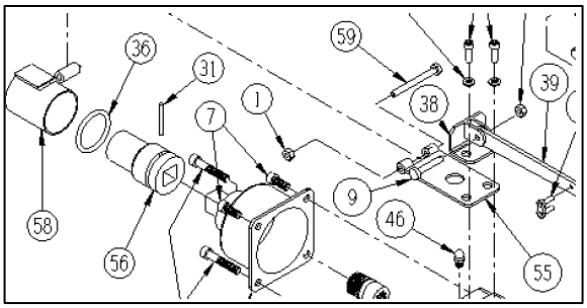

The Tie Drill can be installed with a depth gauge.

The depth gauge attaches with two bolts at the impact head of the tool.

- If ordered with the Depth Gauge Kit, the kit is installed at the factory.

The depth of the hole is set by loosening a clamping knob (Arrow A), adjusting the stop (Arrow B) to the desired position, and then tightening the knob to lock it in position.

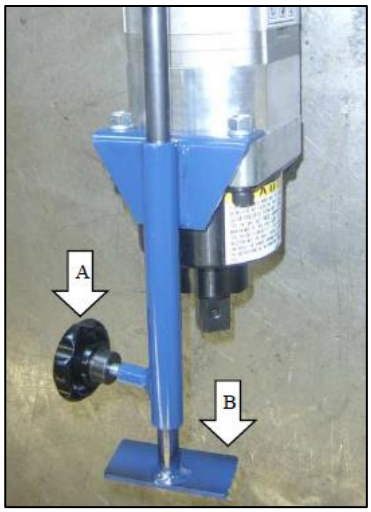

Depth Gauge

Tool Operation

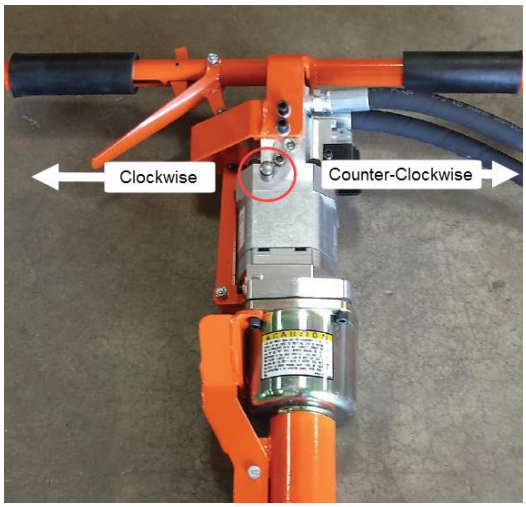

1. Position the drill bit in the location where the hole is required.
2. Shift the spool to the direction of rotation desired.
   - Hold the tool with the trigger in the right hand and push the spool towards the operator to rotate the socket in the clockwise direction.
   - Push the spool away from the operator to rotate the socket in the counter-clockwise direction.
3. Hold the tool securely with both hands, press the trigger lock down and pull the trigger.

⚠CAUTION

Do not shift the spool while the tool is operating, damage to internal components may occur.

4. Release the trigger to stop the drill.
5. Move on the next hole to be drilled.

Stopping the Drill

- When the bit passes through the tie, continue to hold the trigger in the on position and carefully pull the dill up until the bit clears the hole.
- Release the trigger to stop rotation of the attachment. Running the tool while lifting it out of the hole will clean the hole.

If using the Depth Stop

- Drill into the tie until the depth stop contacts the surface of the tie.
- Continue to hold the trigger in the on position and carefully pull the dill up until the bit clears the hole. Release the trigger to stop rotation of the attachment. Running the tool while lifting it out of the hole will clean the hole.

If the drill bit binds in the hole and the tool cannot be pulled out of the hole, release the trigger to stop the bits rotation. Change the rotation of the tool to counter-clockwise and pull the trigger while pulling the tool out of the hole. Push the rotation spool back to the clockwise position before going to the next hole.

Section 4: Maintenance

It is highly recommended to practice regular check-ups and maintenance in accordance with the usage frequency to keep your tool in better condition and reduces total running costs.

WARNING **Do not perform maintenance on the machine while the hydraulic power source motor is running or when hoses are connected.**

All maintenance must be done with the tool disconnected from the power source.

Cleaning and Maintenance Recommendations

- Wipe all external surfaces after each use with a clean, lint free cloth to remove surface contaminants from the tool.
- To extend the life of the handle padding, do not allow sharp edges or foreign objects to rub on the padding.
- Store all tools in an enclosed area to prevent the weather from contaminating their systems.

Safety Devices

When maintenance is complete, make sure the following:

- The hydraulic control valves are operable.
- The hydraulic quick couplers and hoses are safe to use.
- Weekly lubrication of the gripper cams and gripper arms.
- The gripper pads are in good condition.

Daily

WARNING **Do not attempt to locate hydraulic leaks by feeling around hoses and fitting with hand. Pin-Hole leaks can penetrate the skin.**

- Wipe all tool surfaces, fittings, and couplings free of grease, dirt, and foreign materials.
- Inspect the tool, hydraulic system, hoses, and fittings for signs of leaks, cracks, wear, and/or damage. Replace if necessary.
- To prevent contamination, always install dust caps over the hydraulic ports when disconnected.
- Inspect machine for damage and wear, replace as required.

Weekly Maintenance

Grease the impact mechanism using the grease zerk located on top of the motor adapter plate.

Apply 2 to 3 strokes (approximately 4 cc / ml) from a standard grease gun using suitable grease.

- Grease leakage from around the square drive is common after lubrication and during hard use. Wipe the grease off to prevent it from splattering all over.

Note: Do not attempt to repair this product. Only properly trained personnel should perform any maintenance service, and or repair to this tool.

Monthly Maintenance

- Perform a detailed inspection of the systems hoses, and fittings according to the hydraulic hose operator's manual and as stated in SAE standard j1273, May 1989 or latest revision.
- Replace the hoses and/or fittings if necessary.

Semi-Annually

- Remove the impact head (Item 37) and clean the grease off the impact components.
- Remove the grease from the impact housing.
- Mount the impact head (Item 37) to the motor adapter plate (Item 29) after placing the assembled hammer mechanism in the impact head.
- There may be more than on shim. After assembly, apply 100 strokes of grease (133 cc's) to the lubricating zerk.

Cold Weather Operation

Hydraulic fluids are thicker in cold weather; therefore, run the engine at low idle lone enough to bring the fluid temperature up to minimum of 50 °F / 10 °C or until the top of the hydraulic tank feels warm, before operating tool.

Storage Preparation

The tool should be stored in a cool, dry environment which is not subjected to rapid temperature changes.

- Cover male and female hose whips.
- Store in the upright position.
- Secure tool to prevent it from being knocked over.
- Store the Lag Driver on a smooth level surface.

Trouble Shooting

The following chart can be used as a guide to correct any problem you may experience with the tool.

To determine the problem in operation of the lag driver always check that the hydraulic power source is supplying the correct hydraulic flow and pressure to the tool as listed in the table. Be sure you are using an accurate flow meter. Check the flow with the hydraulic fluid temperature at least 80 °F / 27 °C.

Note: Stop and depressurize the hydraulic system before connecting or disconnecting a tool.

Failure to follow these instructions can lead to severe personal injury. Read and follow the instructions in this manual for the proper way to connect and disconnect tools from the hydraulic systems.

Problem	Cause	Remedy
Tool will not run or runs slow.	Power source.	Check power source flows and pressure (5-10 GPM/20-38 LPM at 1500-2000 psi/100-140 bar).
	Coupler or hose.	Check for /remove obstruction.
	Directional spool not fully shifted.	Shift spool to either position.
	If after impact mechanism has been serviced.	Check that all shims have been placed back between the impact head and adapter. Run impact to circulate grease.
	Mechanical failure.	Disassemble tool and check for damage.
Poor impact performance.	Pressure and return hoses reversed.	Correct for proper flow direction.
	Worn impact components.	Disassemble front half of impact and check for damaged or severely worn parts.
	Incorrect grease.	Remove and clean impact head (see maintenance section for procedures).
	Cold hydraulic fluid.	Allow power source to warm up.
Trigger hard to pull.	Back pressure too high.	Should not exceed 250 psi/ 17 bar and 10 GPM /38 LPM.
	Dirty spool.	Remove and clean spool and replace O-rings and backups.
	Control linkage.	Inspect linkage between trigger and valve spool.
Hydraulic fluid leaks between motor and manifold block.	Damaged seal.	Disassemble tool and replace seal.
Hydraulic fluid leaks between adapter and motor.	Damaged shaft seal.	Split tool between adapter and motor and replace seal.

Troubleshooting Continued

Hydraulic fluid leaks from control spools.	Damaged seals.	Replace all O-rings and backups on leaking spool.
Grease leaks between impact head and adapter.	Loose fasteners.	Tighten bolts.
Grease leaks around impact drive shaft.	Heavy duty use.	Normal due to heat buildup.
	Impact mechanism over greased.	Wipe clean until grease stops leaking, adjust greasing maintenance to match duty cycle.
Grease leaks around impact drive shaft when cold.	Anvil bushing worn.	Replace anvil bushing.

Section 5: Parts and Service Support

Technical Support & Service

Telephone and web-based technical support is available for current production models through our Customer Service Department. Service Manuals and limited technical support may be available for models that are no longer in production.

Telephone and E-mail Technical Support

Telephone and e-mail technical support is available on normal U.S. business days from 8:00 AM to 5:00 PM U.S. Central Time Zone (GMT +6 (+5 Daylight Savings Time)).

1955 Norwood Court
Mount Pleasant, WI 53403
Phone: (262) 637-9681
Email: custserv@racinerailroad.com
racinerailroad.com

Unit 3 Hartington Industrial Estate
Chesterfield • Derbyshire, S43 3YF
Phone: 0330 164 1375
Email: info@racinerailroad.co.uk
racinerailroad.co.uk

Non-Warranty Technical Support

Depending upon the circumstances and availability of technical service personnel, we may provide technical assistance and/or field service support, *at the customer's expense*, to assist in the correction of non-warranty related problems. Contact our Customer Service Department to coordinate Non-Warranty Technical or Field Service Support.

Warranty Support Technical Support

Depending upon the circumstances and availability of technical service personnel, we may provide technical assistance and/or field service support, *at no charge to the customer*, to assist in the correction of warranty related problems. Contact our Customer Service Department to coordinate Warranty Technical or Field Service Support.

Warranty Parts Claims

Material claimed to be defective must be returned to our factory for evaluation. Defective materials will be replaced, or your account will be credited if replacement materials have already been purchased. Please contact our Customer Service Department at the address provided below if you have any questions or problems.

Warranty Service Support

Depending upon the circumstances and availability of technical service personnel, we may provide technical assistance and/or field service support, at no charge to the customer, to assist in the correction of warranty related problems. Contact our Customer Service Department at the address provided above to coordinate Warranty Service Support.

Tie Drill Assembly

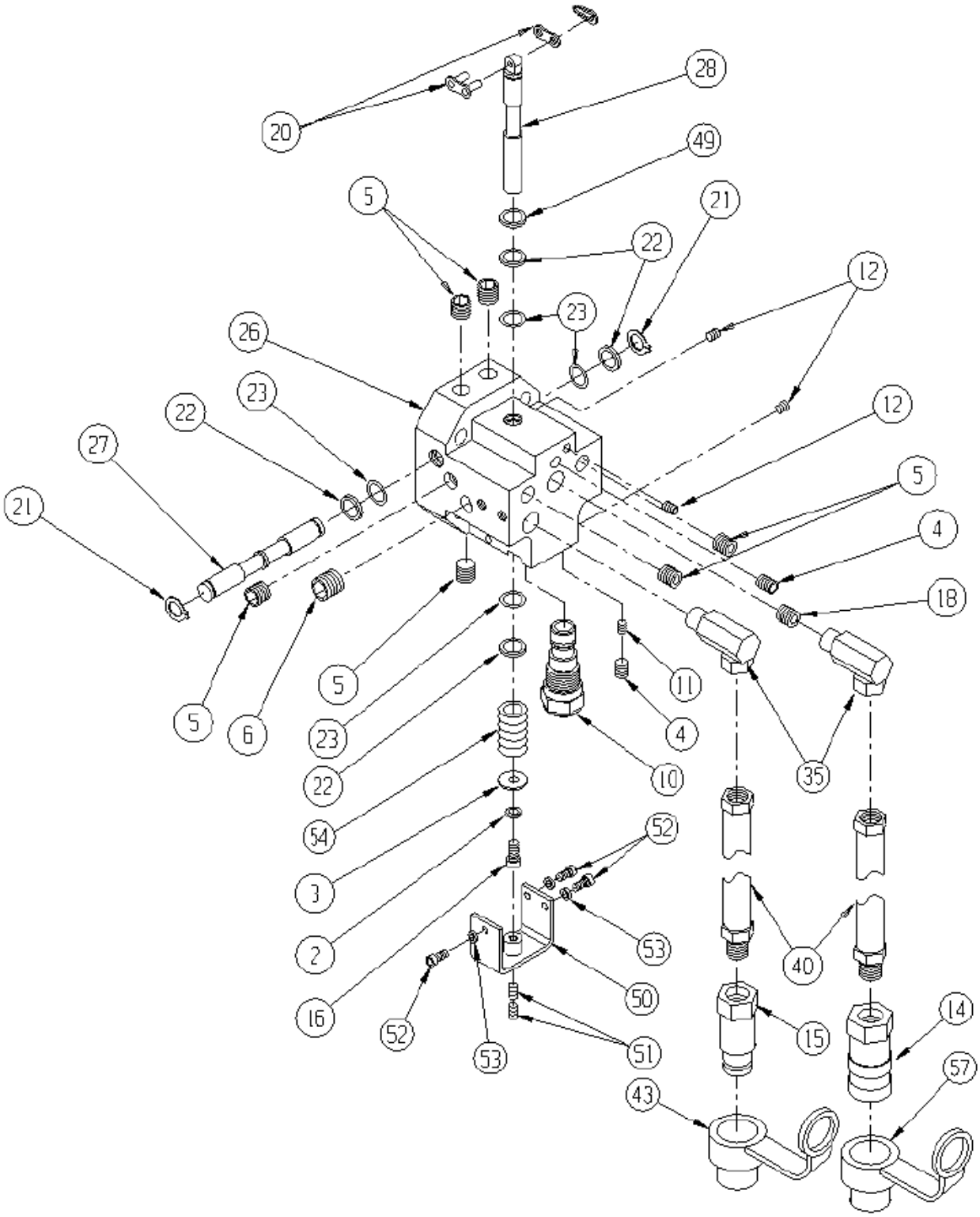

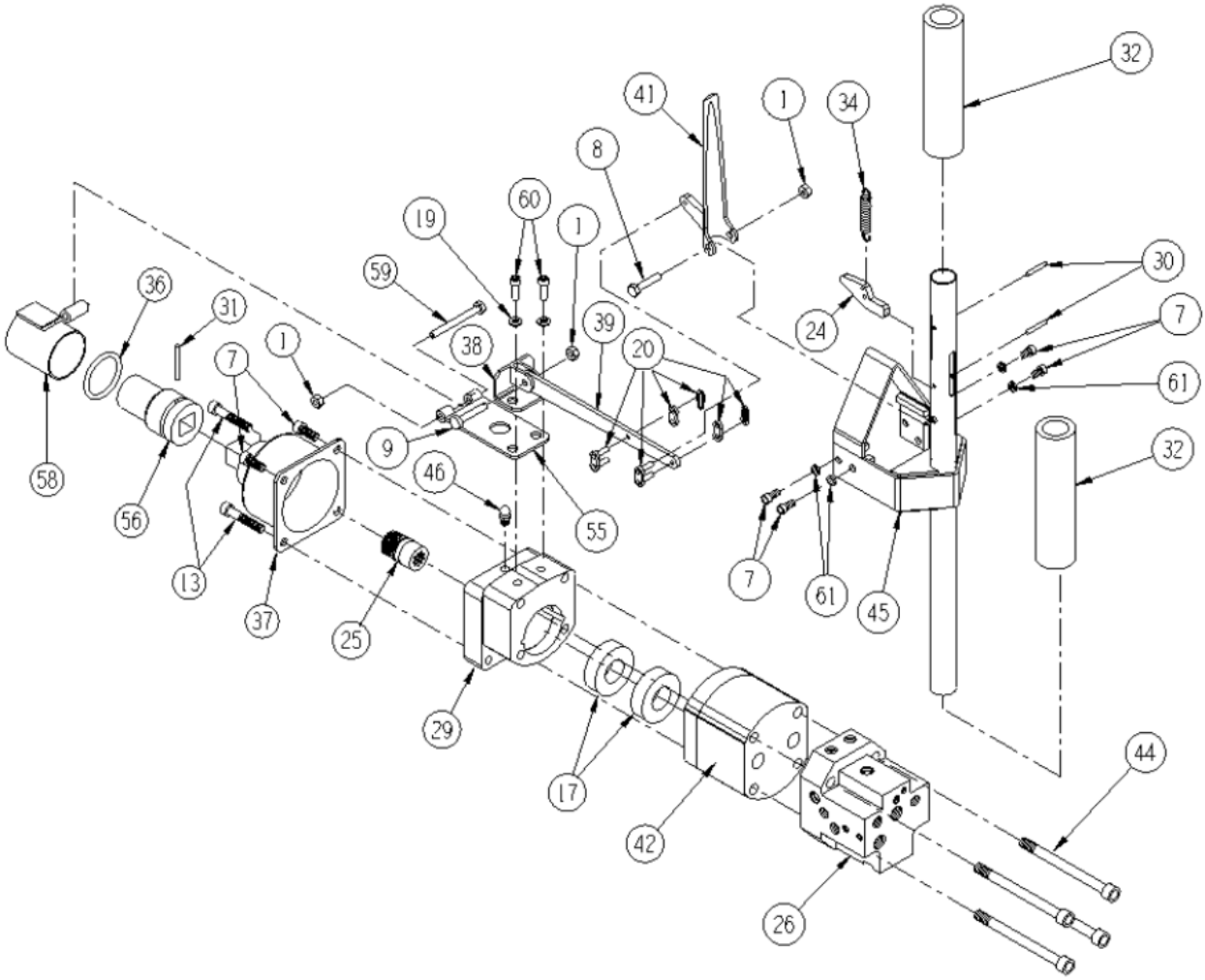
32
41
1
34
8
60
19
1
30
59
36
31
39
7
24
38
20
1
7
61
9
46
32
58
55
56
13
7
61
45
37
25
29
44
17
42
26

Tie Drill Parts List

ITEM	DESCRIPTION	QTY
1	NUT 1/4nc NYLOCK	3
2	LOCK WASHER ¼	1
3	WASHER ¼ FLAT	1
4	FITTING 1/8 PLUG ALLEN	2
5	PLUG ¼ ALLEN	6
6	PLUT 3/8 ALLEN	1
7	BOLT 5/16nc X 1 SHCS	6
8	BOLT 1/4nc X 1-3/4	1
9	BOLT ¼nc X 1"	1
10	VALVE FLOW	1
11	ORIFICE .024	1
12	PLUG 1/16 NPT ALLEN	3
13	BOLT 5/16 X 1-3/4	2
14	COUPLER HYD FEMALE	1
15	COUPLER HYD MALE	1
16	BOLT ¼ nc X ½ SHCS	1
17	BEARING	2
18	ORIFICE .218	1
19	WASHER LOCK 3/8	2
20	LINK VALVE #41	2
21	SNAP RING ½	2
22	BACK-UP -014	4
23	QUAD RING -014	4
24	TRIGGER SAFETY STOP	1
25	COUPLER SLINE	1
26	MANIFOLD CONTROL	1
27	SPOOL DIRECTIONAL	1
28	SPOOL ON/OFF	1
29	PLATE MOTOR ADAPTER	1
30	PIN ROLL .156 X 1.00	2
31	PIN RETAINER	1
32	HAND GRIP	2
33	GRAPHIC SET COMPLETE	1
34	SPRING TRIGGER STOP	1
35	FITTING SHORT 90°	2
36	RING RETAINER	1
37	HEAD IMPACT	1
38	BRACKET MOUNT	1
39	LINK ON/OFF	1
40	HOSE WHIP	2
41	TRIGGER	1
42	MOTOR HYDRAULIC	1
43	COVER DUST	1
44	BOLT 3/8 X 4-1/2 SHCS	4
45	HANDLE COMPLETE	1
46	ZERK GREASE 1/8	1
49	WIPER SEAL	1
50	SPOOL STOP	1
51	SCREW SET SOCKET ¼-20 X 3/8	2
52	BOLT #10-24 X ½ SHCS	3
53	WASHER LOCK #10	3
54	SPRING	1
55	MOUNT CHUCK GUARD	1
56	¾ DRIVE 7/16 QUICK CHUCK	1
57	COVER DUST	1
58	GUARD CHUCK	1
59	BOLT 1/4NC X 2.50	1
60	BOLT 3/8NC X ¾ SHCS	2
61	WASHER LOCK 5/16	4

Drill Bit Guard Assembly

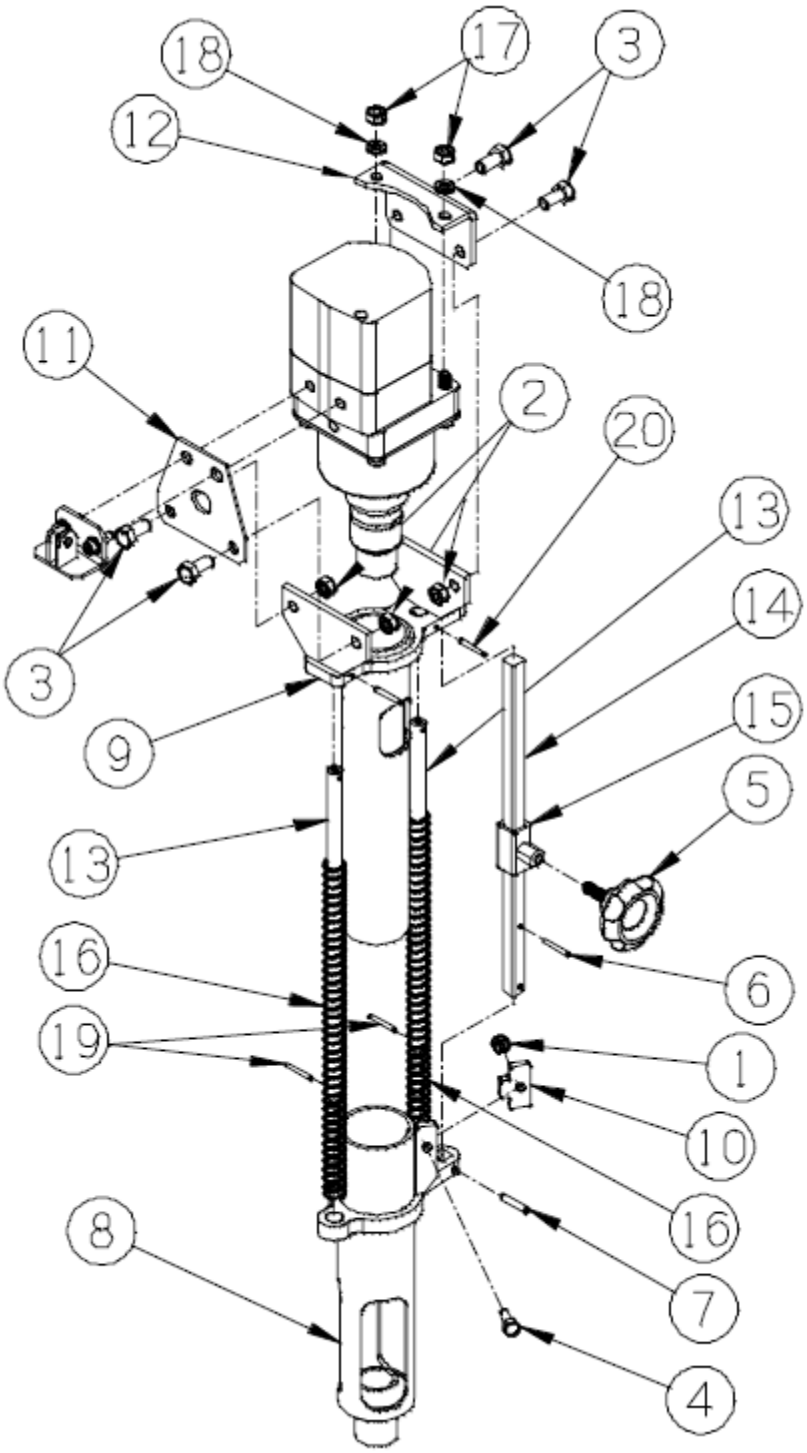

Drill Bit Guard Parts List

ITEM	DESCRIPTION	QTY
1	NUT 1/4NC NYLOCK	1
2	NUT 5/16 NYLOCK	4
3	BOLT 5/16 X ¾	4
4	BOLT ¼ X 1.00	1
5	KNOB LOCKING	1
6	SPIROL PIN 1/8" X 1"	1
7	ROL PIN 3/16 X 1.00	1
8	GUARD LOWER	1
9	GUARD UPPER	1
10	GUIDE TUBE	1
11	MOUNT GUARD RIGHT	1
12	MOUNT GUARD LEFT	1
13	GUIDE SPRING	2
14	GAUGE DEPTH	1
15	STOP DEPTH GAUGE	1
16	SPRING RETURN	2
17	NUT 5/16	2
18	WASHER LOCK	2
19	ROLL PIN .156 X 1.00	2
20	ROLL PIN .125 X 1.50	2

Tie Drill Depth Gauge Assembly

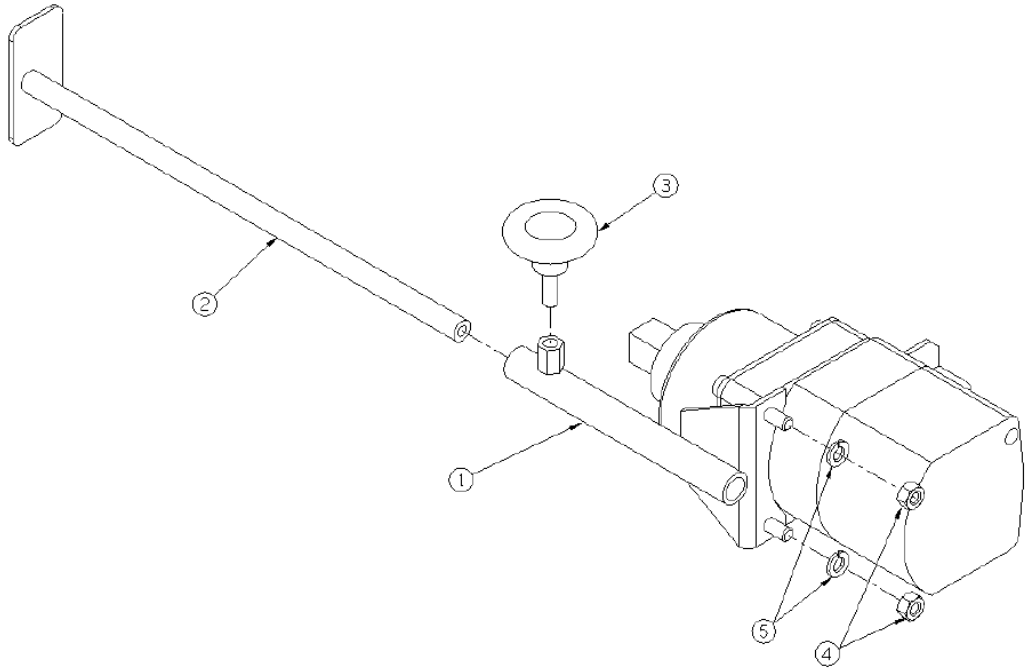

Tie Drill Depth Gauge Parts List

ITEM	DESCRIPTION	QTY
1	MOUNT GUIDE	1
2	GAUGE STOP	1
3	KNOB CLAMPING	1
4	NUT 5/16-18	2
5	WASHER LOCK 5/16	2

Service Part

FOR SERVICE ONLY

NO.	QTY	DESCRIPTION	PART NO.
1	REF	GUARD, LOWER	476755

Section 6: Warranty Terms and Conditions

Warranty Terms and Conditions

Warranty Period

Each new machine and new parts of our manufacture are warranted against defects in material and workmanship for one year from the date of shipment from our factory.

When contacting customer service for factory parts, service or warranty support please provide the:

- Racine Railroad Products Model
- Serial Number
- Any locally assigned identification

Vendor Parts Warranty Period

Other equipment and parts used, but not manufactured by Racine Railroad Products, Inc., are covered directly by the manufacturer's warranty for their products.

Warranty Parts and Service

We will repair or replace, without charge, F.O.B. factory, Racine, Wisconsin, USA, any part Racine Railroad Products manufactures which is proven to be defective during the warranty period.

Material claimed defective must be returned, if requested, to the factory within 30 days from the date of the claim for replacement. Ordinary wear and tear, abuse, misuse, and neglect are not covered by this warranty. Depending upon the circumstances, we may provide technical assistance and/or technical service support, without charge, to assist in the correction of warranty related problems.

Non-Warranty Parts and Service

Material damaged through normal wear and tear, abuse, misuse and/or neglect are not covered by our warranty and should be ordered directly from Customer Service.

Note: Parts for models that are no longer in production may not be available.

Non-Warranty Parts Orders

When placing a parts order please provide the following information:

- Company Name and Billing Address
- Purchase Order Number and Issuing Authority
- Shipping Address
- Special Handling Instructions
- Contact Phone Number
- Machine Model and Serial Number
- Part Numbers and Quantities Being Ordered

Note: *Please use Racine Railroad Products part numbers when ordering parts.* Racine Railroad Products part numbers are shown in the parts lists and drawings of this manual and have only six (6) numbers.

Any part number with other than six numbers (e.g., contains alpha-numeric characters) is a Vendor Part Number and ***not*** a Racine Railroad Products part number